1" Décor®

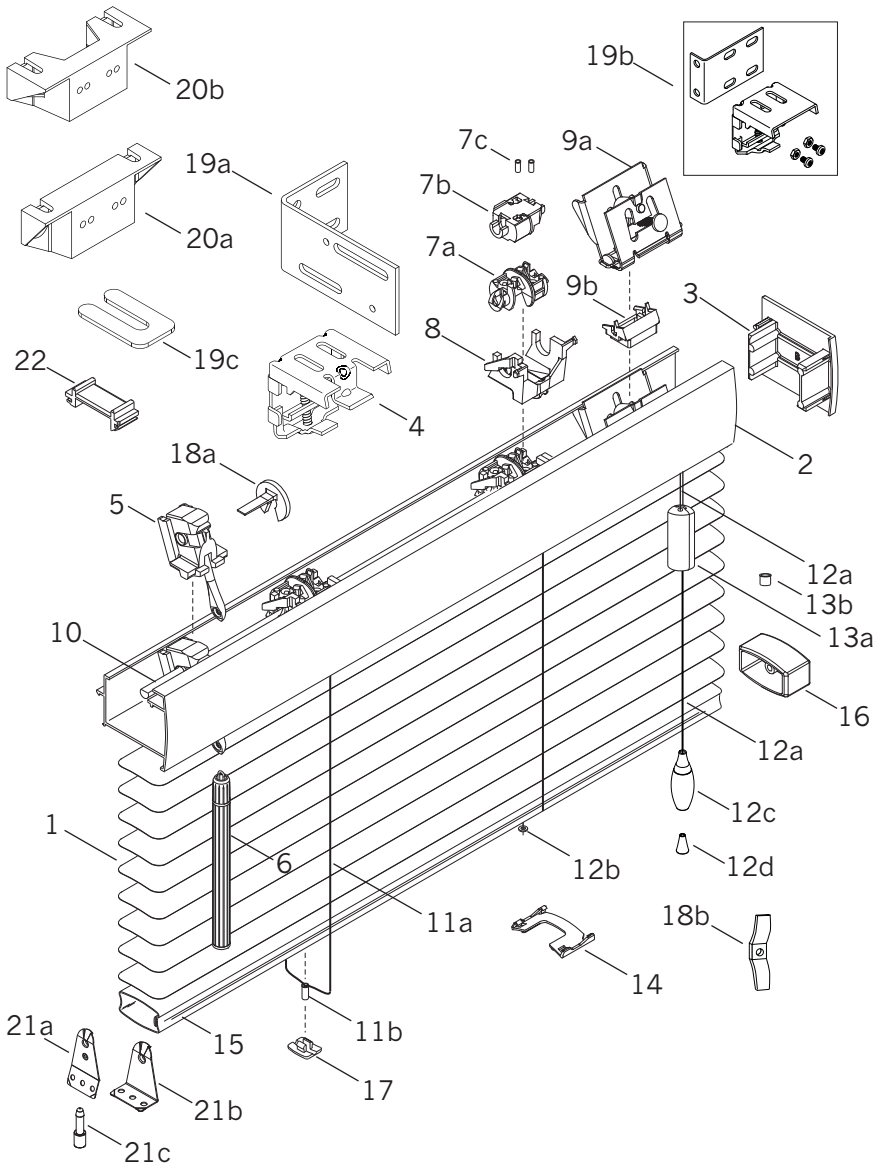

Standard Parts

1. Slat
2. Headrail
3. Headrail End Cap
4. Hidden Installation Bracket
5. Wand Tilter
6. Wand
7a. Tape Roll/Slot Type
7b. Tape Roll/Bead Type
7c. X-Tape Locator Grommet
8. Tape Roll Support
9a. Cordlock
9b. Cordlock Adaptor with Separator
10. Tiltrod
11a. Cable Tape Ladder
11b. Cable Tape Grommet
12a. Lift Cord
12b. Lift Cord Grommet
12c. Tassel
12d. Conical Tassel Washer
13a. Cord Stop
13b. Cord Stop Washer
14. Tape Spacer
15. Bottom Rail
16. Bottom Rail End Cap
17. Tape Button
18a. Tilter Lock
18b. Child Safety Kit (Cord Cleat)

Optional Parts

19a. Extension Bracket
19b. End Mount Bracket Kit
19c. Bracket Shim
20a. ½" Spacer Block
20b. ⅞" Spacer Block
21a. Metal Hold-Down Bracket (Jamb)
21b. Metal Hold-Down Bracket (Sill)
21c. Hold-Down Pin
22. Cord Bridge

© 2010 Hunter Douglas. ®Registered trademark of Hunter Douglas. ™ Trademark of Hunter Douglas.

1" Décor®

No.	PCN	Description
1.	5001400xxxH	0.008" x 25 mm Slat
2.	5908200xxx	Nested Universal Rail (with bottom rail nested) – 96 ft.
	5908100xxx	Nested Universal Rail (with bottom rail nested) – 192 ft.
3.	5908034xxx	Convex Headrail End Cap
4.	5908135000	Hidden Installation Bracket
5.	5908566000	Wand Tilter Assembly
6.	5008508000	12" Wand Assembly
	5008501000	20" Wand Assembly
	5008502000	30" Wand Assembly
	5008503000	40" Wand Assembly
	5008504000	50" Wand Assembly
	5008505000	60" Wand Assembly
	5008570000	70" Wand Assembly
	5008578000	78" Wand Assembly
	5008506000	90" Wand Assembly
	5008507000	120" Wand Assembly
7a.	5908570000	Tape Roll/Slot Type
7b.	5908569000	Tape Roll/Bead Type
7c.	5008047000	X-Tape Locator Grommet (Top)
8.	5907567000	Tape Roll Support
9a.	5008564000	Cordlock
9b.	5908564000	Cordlock Adaptor With Separator
10.	5908027000	Tiltrod – 16 ft.
11a.	5008081xxx	20 mm Cable Tape Ladder – Colors
	5008082xxx	20 mm Cable Tape Ladder – Duotones
	5008080530	20 mm Cable Tape Ladder – Natural
11b.	5007308000	Cable Tape Grommet (Bottom)
12a.	5009075xxx	Lift Cord – 1.4 mm
12b.	5008083000	Lift Cord Grommet
12c.	7003093000	Decorative Tassel
12d.	7003094000	Conical Tassel Washer
13a.	7007736xxx	Cylindrical Cord Stop, 500 pack
	7007636xxx	Cylindrical Cord Stop, 100 pack
13b.	5008087000	Cord Stop Washer
14.	5008036000	Clear Plastic Tape Spacer
15.	N/A	Bottom Rail (nested with headrail)
16.	5009033xxx	¾" Bottom Rail End Cap
17.	5009035xxx	Tape Button Aluminum

No.	PCN	Description
18a.	5907202000	Plastic Tilter Lock
18b.	2980246000	Child Safety Kit (Cord Cleat)
Optional Parts:		
19a.	5908072000	Extension Bracket
19b.	5908139000	End Mount Bracket Kit (each set contains (2) ea.: end mount brackets, installation brackets and attachment screws)
19c.	5908237000	Bracket Shim
20a.	5907230000	½" Spacer Block with Screws
20b.	5907890000	⅞" Spacer Block with Screws
21a.	5007309000	Metal Hold-Down Bracket (Jamb)
21b.	5007310000	Metal Hold-Down Bracket (Sill)
21c.	5007307000	Hold-Down Pin
22.	5909561000	Cord Bridge

xxx = 3-digit color code

© 2010 Hunter Douglas. ®Registered trademark of Hunter Douglas. ™ Trademark of Hunter Douglas.