1" Décor® with LiteRise®

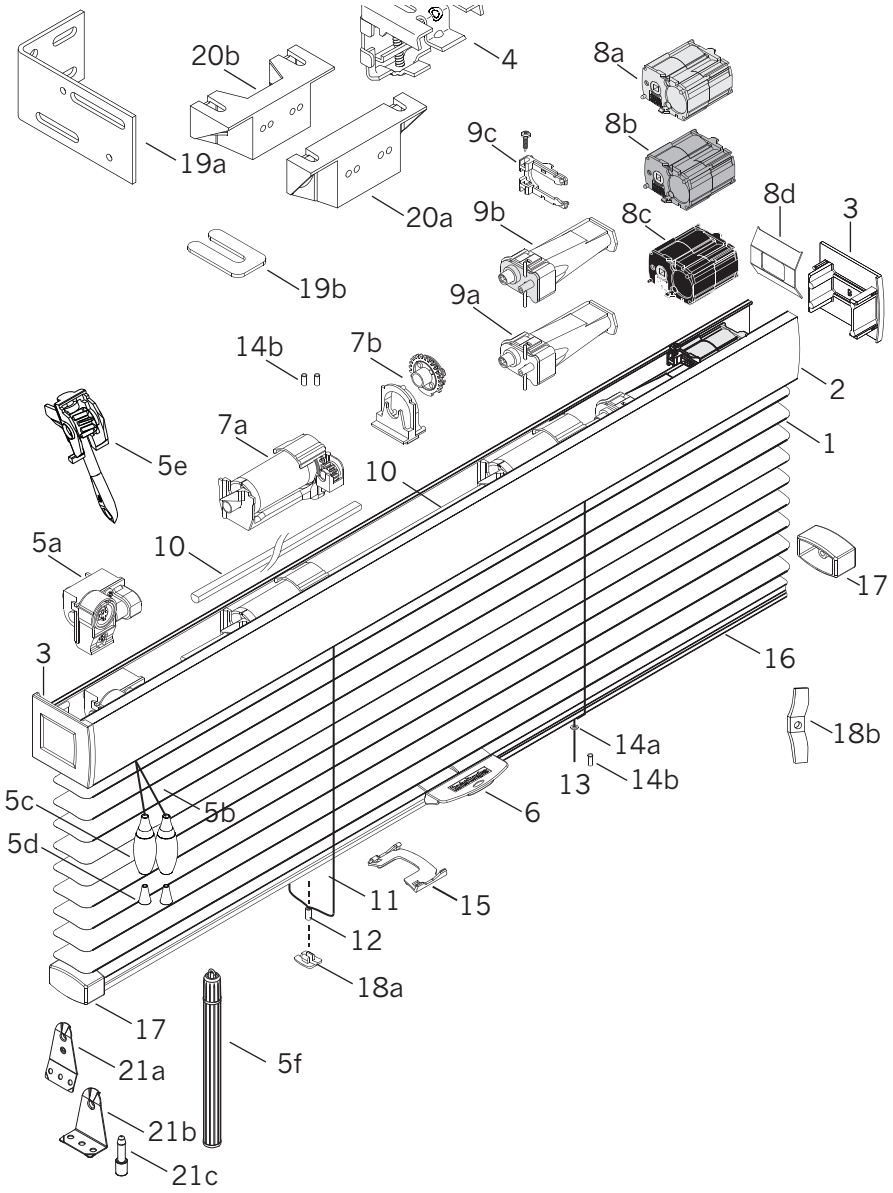

Standard Parts

1. Slat
2. Headrail
3. Headrail End Cap
4. Hidden Installation Bracket
5a. Cord Tilter
5b. Tilter Cord
5c. Tassel
5d. Conical Tassel Washer
5e. LiteRise® Wand Tilter
5f. Wand
6. LiteRise Handle
7a. Lift & Tilt Roll Assembly
7b. Tilt Roll Assembly
8a. Motor (Beige)
8b. Motor (Gray)
8c. Motor (Black)
8d. 1" Motor Clamp
9a. Transmission (Red)
9b. Transmission (Black)
9c. Transmission Adaptor
10. Tiltrod
11. Cable Tape Ladder
12. Cable Tape Grommet
13. LiteRise Lift Cord
14a. Lift Cord Grommet
14b. X-Tape Locator Grommet
15. Tape Spacer
16. Bottom Rail
17. Bottom Rail End Cap
18a. Tape Button
18b. Child Safety Kit (Cord Cleat)

Optional Parts

19a. Extension Bracket
19b. Bracket Shim
20a. ½" Spacer Block
20b. ⅞" Spacer Block
21a. Metal Hold-Down Bracket (Jamb)
21b. Metal Hold-Down Bracket (Sill)
21c. Hold-Down Pin

© 2010 Hunter Douglas. ®Registered trademark of Hunter Douglas. ™ Trademark of Hunter Douglas.

1" Décor® with LiteRise®

No.	PCN	Description
1.	5001400xxxH	0.008" x 25 mm Slat
2.	5908200xxx	Nested Universal Rail (with bottom rail nested) – 96 ft.
	5908100xxx	Nested Universal Rail (with bottom rail nested) – 192 ft.
	5908210161	Nested Universal Rail (Brushed) – 96 ft.
3.	5908034xxx	Convex Headrail End Cap
4.	5908135000	Hidden Installation Bracket
5a.	7300103000	LiteRise® Cord Tilter
5b.	5009077xxx	0.9 mm Tilter Cord
5c.	7003093000	Decorative Tassel
5d.	7003094000	Conical Tassel Washer
5e.	7300104000	1" LiteRise Wand Tilter Assembly
5f.	5008508000	12" Wand Assembly
	5008501000	20" Wand Assembly
	5008502000	30" Wand Assembly
	5008503000	40" Wand Assembly
	5008504000	50" Wand Assembly
	5008505000	60" Wand Assembly
6.	7300112000	LiteRise Bottom Rail Handle
7a.	7300100000	1" LiteRise Lift & Tilt Roll Assembly
7b.	7300102000	1" LiteRise Metal Tilt Roll Assembly
8a.	7300109000	LiteRise 1" Motor (Beige)
8b.	7300110000	LiteRise 1" Motor (Gray)
8c.	7300111000	LiteRise 1" Motor (Black)
8d.	7300143000	LiteRise 1" Motor Clamp
9a.	7300156000	LiteRise 1" Transmission (Red)
9b.	7300157000	LiteRise 1" Transmission (Black)
9c.	7300133000	LiteRise 1" Transmission Adaptor Plate with Screws
10.	5908027000	Tiltrod – 16 ft.
11.	5008081xxx	20 mm Cable Tape Ladder – Colors
	5008082xxx	20 mm Cable Tape Ladder – Duotones
	5008080530	20 mm Cable Tape Ladder – Natural
12.	5007308000	Cable Tape Grommet (Bottom)
13.	7300131xxx	LiteRise Lift Cord
14a.	5008083000	Lift Cord Grommet
14b.	5008047000	X-Tape Locator Grommet (Top)

No.	PCN	Description
15.	5008036000	Clear Plastic Tape Spacer
16.	N/A	1" Rollform Bottom Rail (nested with headrail)
17.	5009033xxx	¾" Rollform Bottom Rail End Cap
18a.	5009035xxx	Tape Button Aluminum
18b.	2980246000	Child Safety Kit (Cord Cleat)

Optional Parts:

19a.	5908072000	Extension Bracket
19b.	5908237000	Bracket Shim
20a.	5907230000	½" Spacer Block with Screws
20b.	5907890000	⅞" Spacer Block with Screws
21a.	5007309000	Metal Hold-Down Bracket (Jamb)
21b.	5007310000	Metal Hold-Down Bracket (Sill)
21c.	5007307000	Hold-Down Pin

xxx = 3-digit color code

© 2010 Hunter Douglas. ®Registered trademark of Hunter Douglas. ™ Trademark of Hunter Douglas.